SHINING 3D
METROLOGY

OptimScan Q12 HD

High-Precision 3D Inspection Scanner

Accuracy
0.004 mm

Minimum Point Distance
0.02 mm

Two Scan
Ranges

Monocular-Stereo Fusion
(MSF)

Single Shot
< 1 s

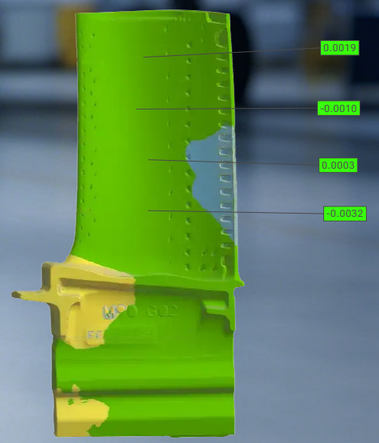

*High-Pressure Turbine Blade

Micron-Level Accuracy with Certified Metrology Confidence

OptimScan Q12 HD pushes beyond the performance limits of fringe projection optical scanning systems, delivering a new level of accuracy and fine-detail capture within its class.

With four high-resolution cameras and extreme high accuracy of 0.004 mm, the system excels at capturing minute features and complex surfaces with exceptional clarity, ensuring highly faithful 3D digitization of intricate geometries.

The system accuracy is rigorously validated according to international standards. All verification tests are conducted in an ISO/IEC 17025-accredited laboratory, guaranteeing full traceability and uncompromising confidence in every measurement result.

Effortless Scan Range Switching

OptimScan Q12 HD features two scan ranges that can be switched with a single click, eliminating manual adjustment of aperture and focal length. Scanned data from different ranges can be seamlessly fused in the software, ensuring both efficiency and detail.

Large Range
220 x 150 mm

Small Range
80 x 50 mm

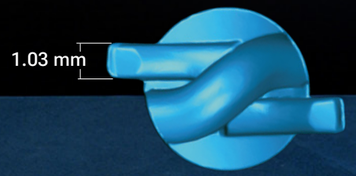

Flexible Operation Modes

OptimScan Q12 HD adapts to your scanning needs with three flexible operation modes.

- **Manual:** OptimScan Q12 HD is compact and easy to carry, giving operators full control and flexibility.
- **Semi-Automated:** Combine a fixed tripod with an automatic turntable supporting up to 20 kg for enhanced efficiency and repeatability.
- **Fully Automated:** Seamlessly integrates with industrial robots for precise, repetitive inspection tasks, making it perfect for series measurement tasks.

- Manual

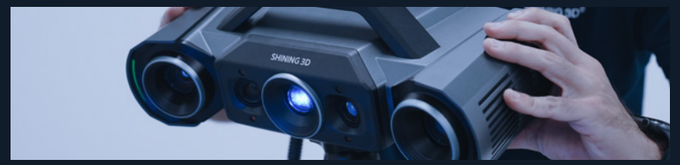

- Semi-automated

- Fully Automated

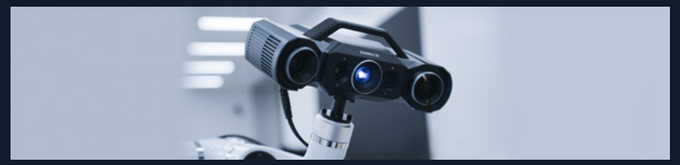

Monocular-Stereo Fusion (MSF)

The monocular-stereo fusion function can effectively increase data coverage and improve the integrity of the scanned data, such as the common turning corners and joints of industrial parts.

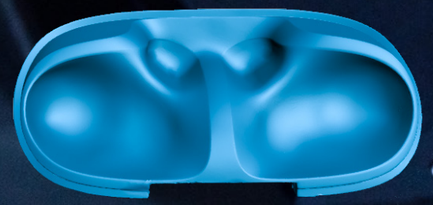

Earbud case front data

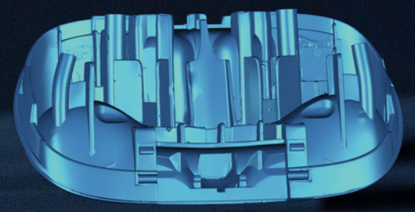

Earbud case back data

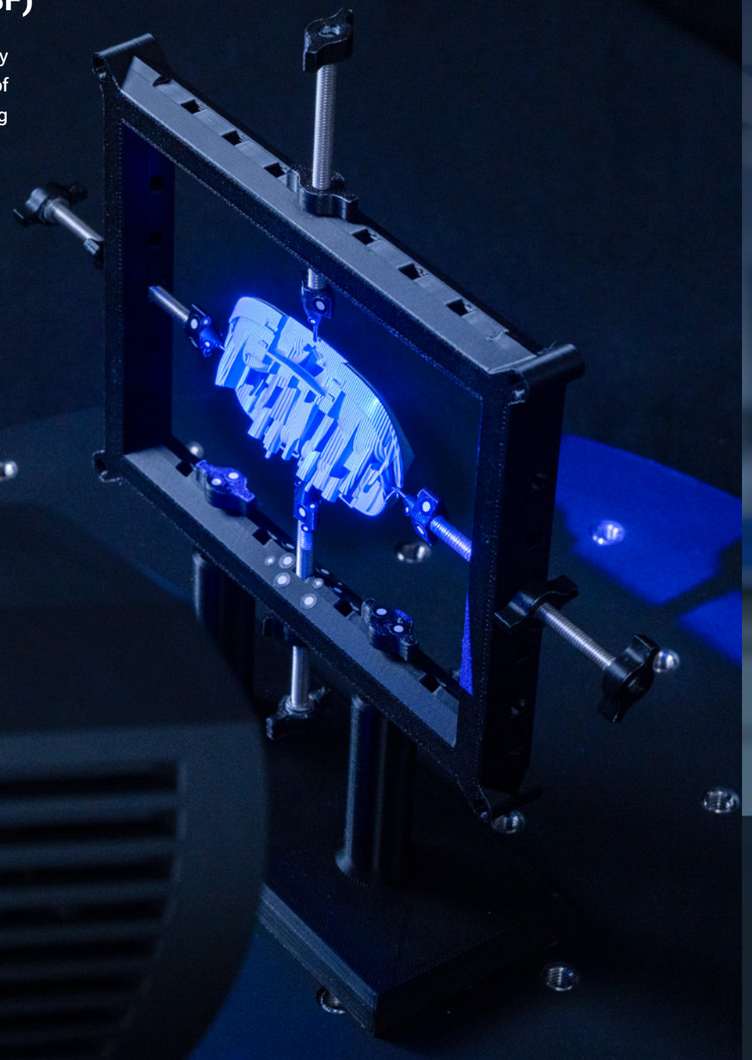

Dual-Axis Turntable (Optional)

An optional automatic dual-axis turntable supports up to 3 kg, enabling multi-angle automated scanning with a single click, significantly enhancing data acquisition efficiency.

With an intelligent supplementary scanning algorithm, the system automatically plans additional scan paths to capture any missing data, ensuring complete and efficient 3D data acquisition of your objects. Equipped with a dual-chip computing platform, each capture takes less than 1 second.

Learn More

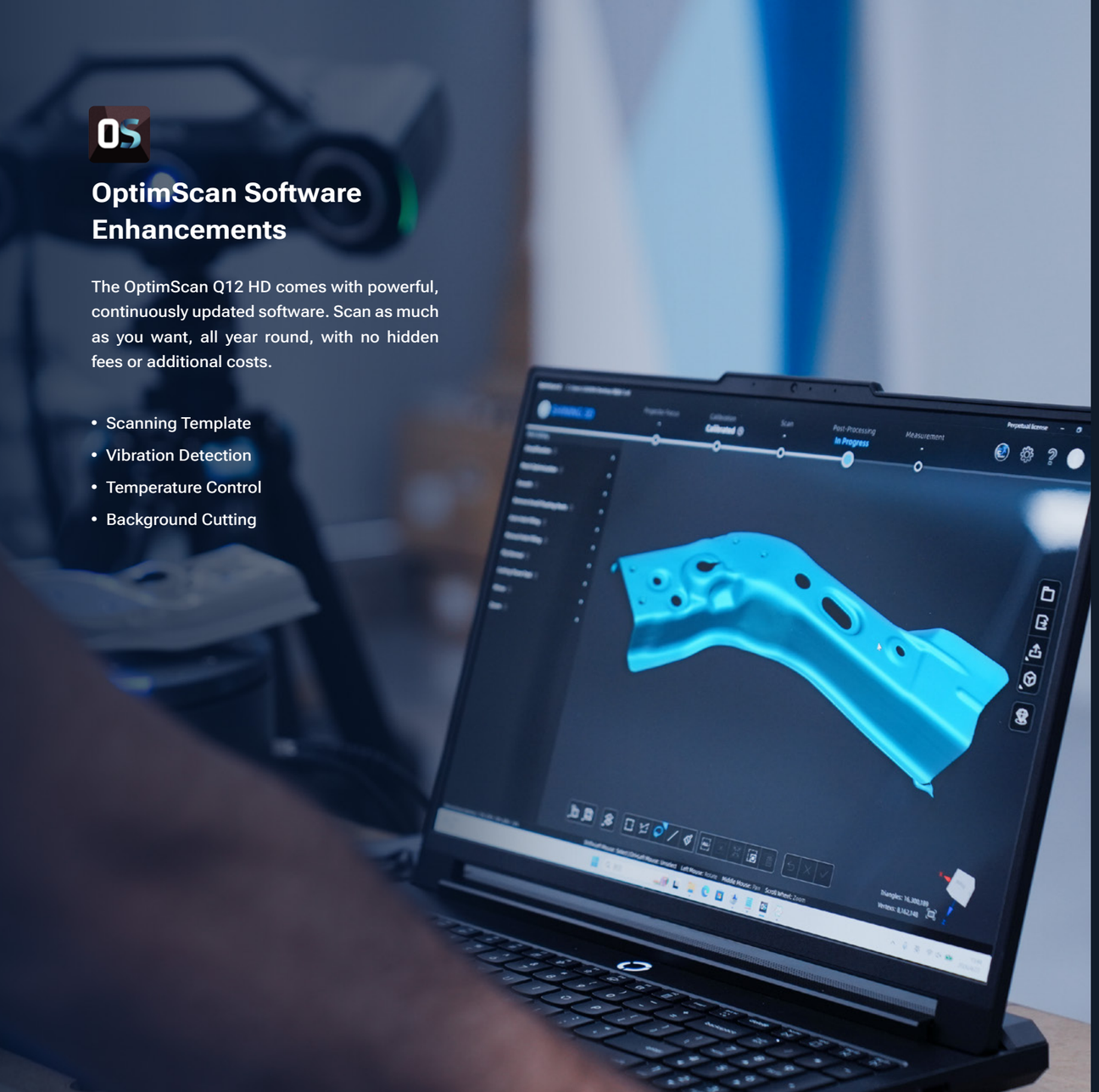

OptimScan Software Enhancements

The OptimScan Q12 HD comes with powerful, continuously updated software. Scan as much as you want, all year round, with no hidden fees or additional costs.

- Scanning Template
- Vibration Detection
- Temperature Control
- Background Cutting

SHINING3D Inspect (Optional)

3D Inspection Module Certified by PTB

SHINING3D Inspect delivers a streamlined, modular, and customizable approach to 3D inspection, simplifying workflows from data acquisition to reporting. The software is suitable for dimensional inspection and quality control of components across industries such as automotive, civil aviation, and precision manufacturing.

Backed by PTB-certified capability, it ensures traceability in every measurement. Independently developed by SHINING 3D, it represents strong in-house expertise and continuous innovation.

Learn More

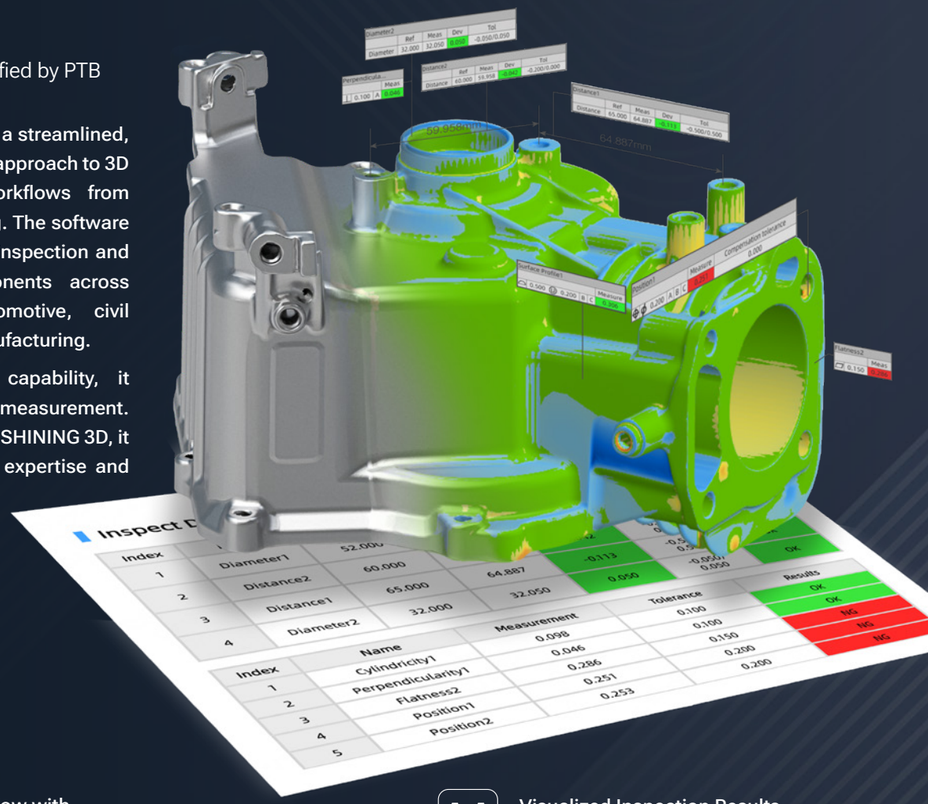

- Streamlined Workflow with Integrated Hardware and Software
- Visualized Inspection Results with Customizable Reports
- Industry-Specific Module Inspection
- Advanced Dimension Functions

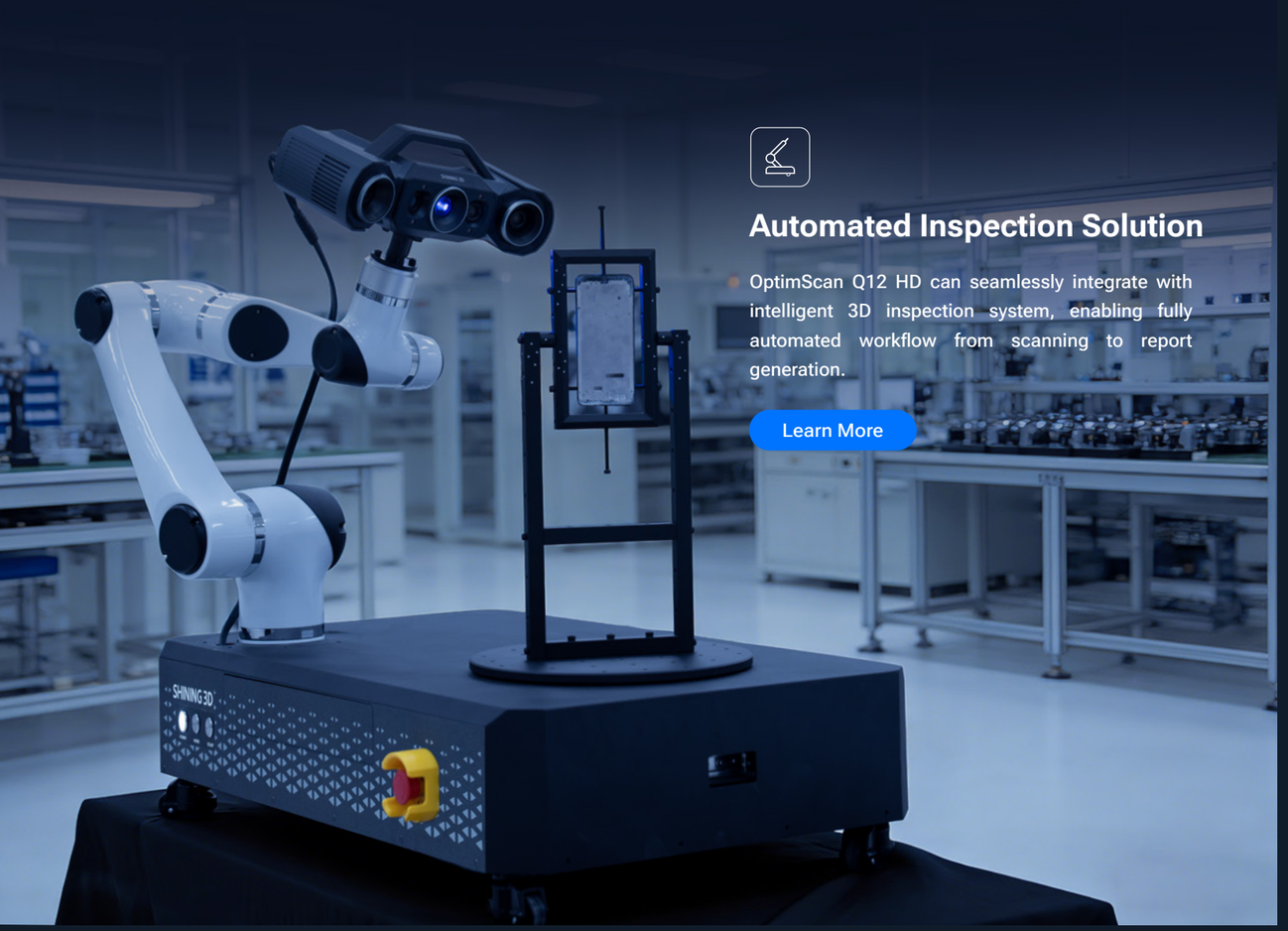

Automated Inspection Solution

OptimScan Q12 HD can seamlessly integrate with intelligent 3D inspection system, enabling fully automated workflow from scanning to report generation.

Learn More

Workflow

Path Teaching > Automated 3D Measurement > Automated 3D Inspection > Automated Report Generation

Data Display

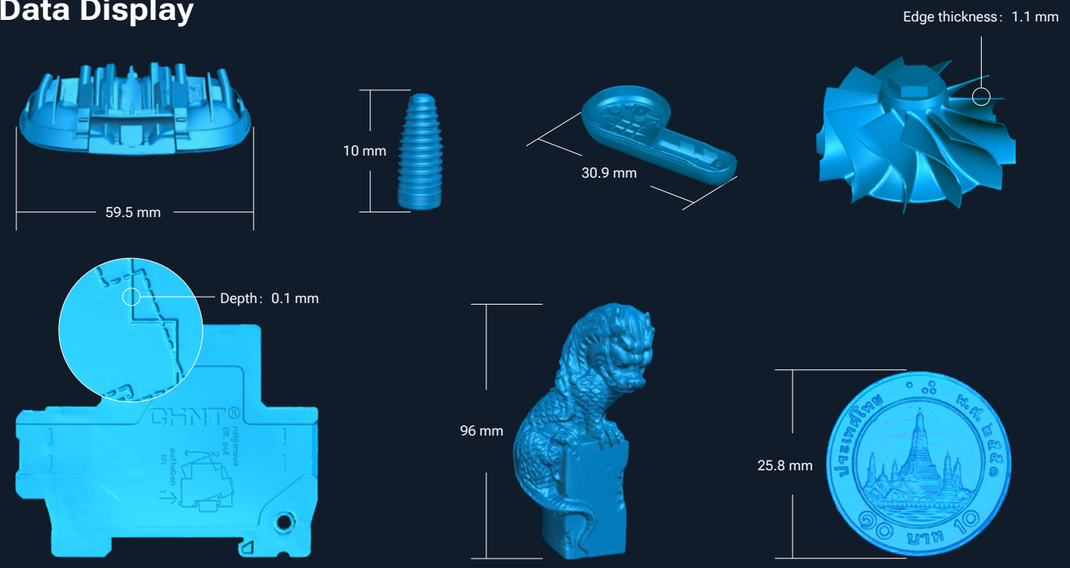

Applications

Civil Aviation

3C Electronics

Automotive Electronics

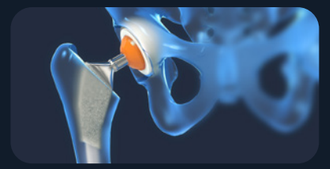

Medical Devices

Precision Injection Molding

Cultural Heritage

SPECIFICATIONS

	OptimScan Q12 HD		OptimScan Q9 HD	
Scan range	Large range	Small range	Large range	Small range
FOV	220 × 150 mm	80 × 50 mm	220 × 150 mm	80 × 50 mm
Accuracy	0.01 mm	0.004 mm	0.01 mm	0.004 mm
Point distance	0.054 mm	0.02 mm	0.06 mm	0.03 mm
Working distance	600 mm	200 mm	600 mm	200 mm
Depth of field	120 mm	30 mm	120 mm	30 mm
Resolution	4 × 12.3MP		4 × 9MP	
Light source	Blue LED			
Weight	3.6 kg			
Dimensions	366 × 162 × 132 mm			
Data cable length	5 m			
Operating Temperature Range	0 ~ 40°C			
Operating Humidity Range	10 ~ 90%			
Certifications	CE, FCC, ROHS, WEEE, KC, FDA, UKCA, IP50, TELEC, TiSAX			
Acceptance test	VDI/VDE 2634 Part 2 & ISO 10360 (certified in ISO 17025 certificated accuracy lab)			

SHINING 3D Tech Co., Ltd.

Hangzhou, China
P: 400-0799-666
No. 1398, Xiangbin Road, Wenyan, Xiaoshan, Hangzhou, Zhejiang, China, 311258

SHINING 3D (HK) COMPANY LIMITED.

Hong Kong, China
P: 00852-23348468/23348568
Room 303A, 3/F, Tower 2, Enterprise Square Phase 1,9 Sheung Yue Road, Kowloon Bay, Kowloon, Hong Kong

SHINING 3D Technology Japan Inc.

Tokyo, Japan
Tradepia Odaiba, 2-3-1 Daiba, Minato-ku, Tokyo

SHINING 3D Technology GmbH.

Stuttgart, Germany
P: +49-711-28444089
Breitwiesenstraße 28, 70565, Stuttgart, Germany

Barcelona, Spain
Calle 27, 10-16, Sector BZ, 08040 Barcelona, Spain

SHINING 3D Technology Inc.

California, USA
P: +1415-259-4787
2450 Alvarado St, Unit 7, San Leandro, CA 94577

Florida, USA
2807 W Busch Blvd, Suite 200, Tampa, FL 33618

Facebook Instagram LinkedIn YouTube

SHINING 3D METROLOGY

www.shining3d.com

sales@shining3d.com

OptimScan Q12 HD-EN 20260507-V1.0